FRONT SUSPENSION

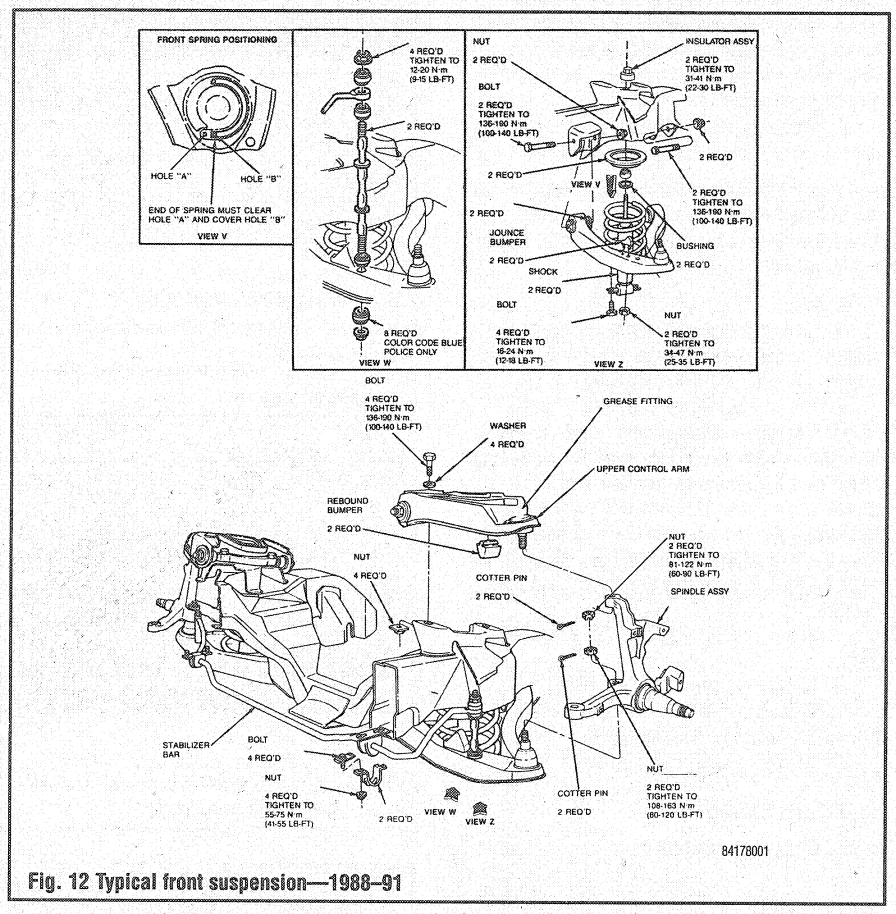

Fig. 12 Typical front suspension—1988–91

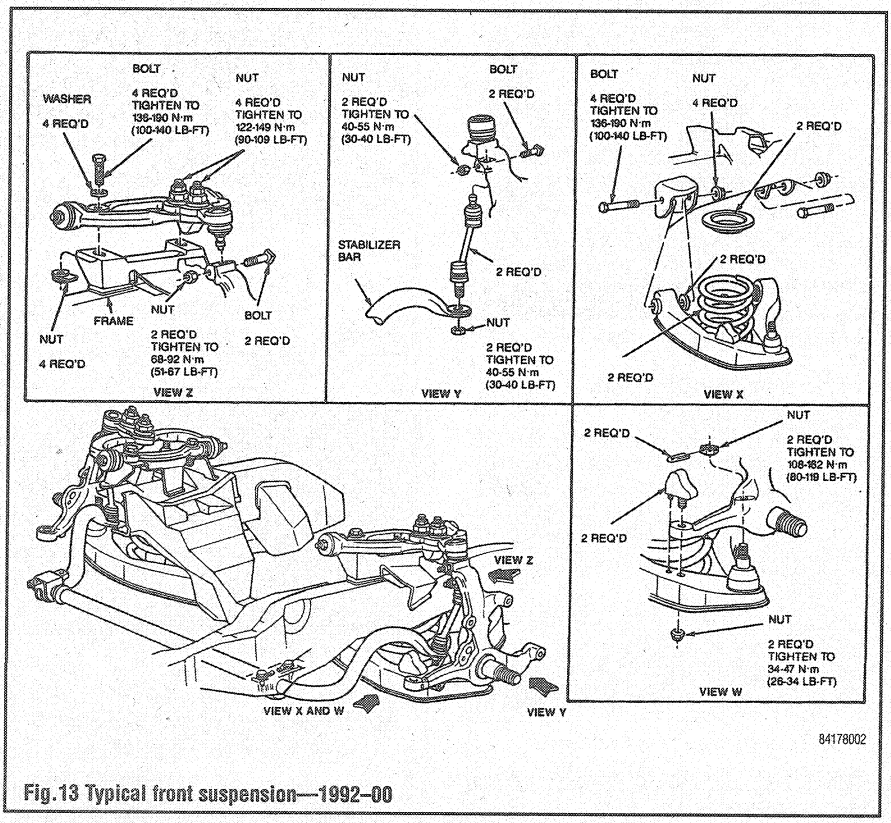

Fig.13 Typical front suspension—1992–00

Coil Springs

REMOVAL & INSTALLATION

See Figures 14, 15 and 16

1. Raise and safely support the vehicle. Remove the wheel and tire assembly.
2. On 1988–91 Town Car, disconnect the stabilizer bar link from the lower arm.
3. Remove the shock absorber. Remove the steering link from the pitman arm.
4. Using spring compressor tool D78P–5310–A or equivalent, install one plate with the pivot ball seat facing downward into the coils of the spring. Rotate the plate, so it is flush with the upper surface of the lower arm.

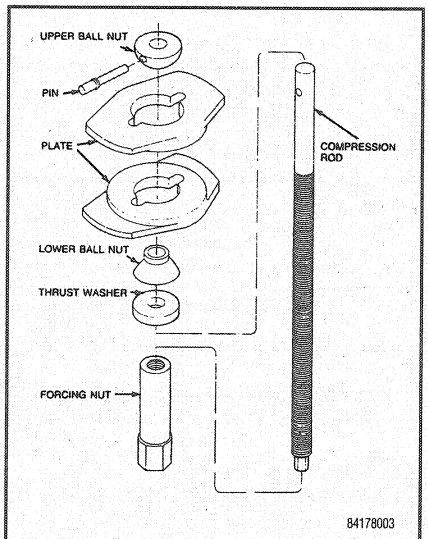

Fig. 14 Spring compressor

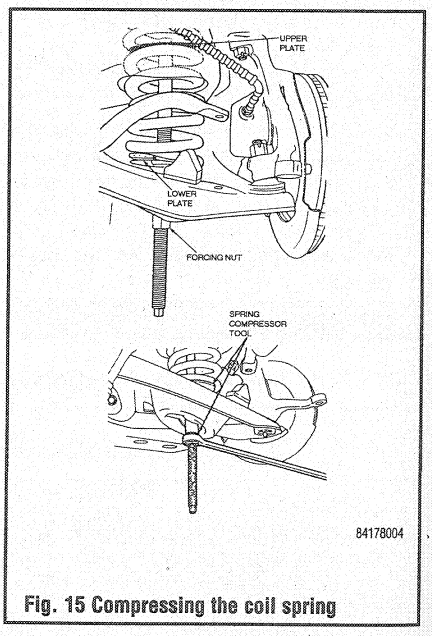

Fig. 15 Compressing the coil spring