DIAGNOSIS AND TESTING (Continued)
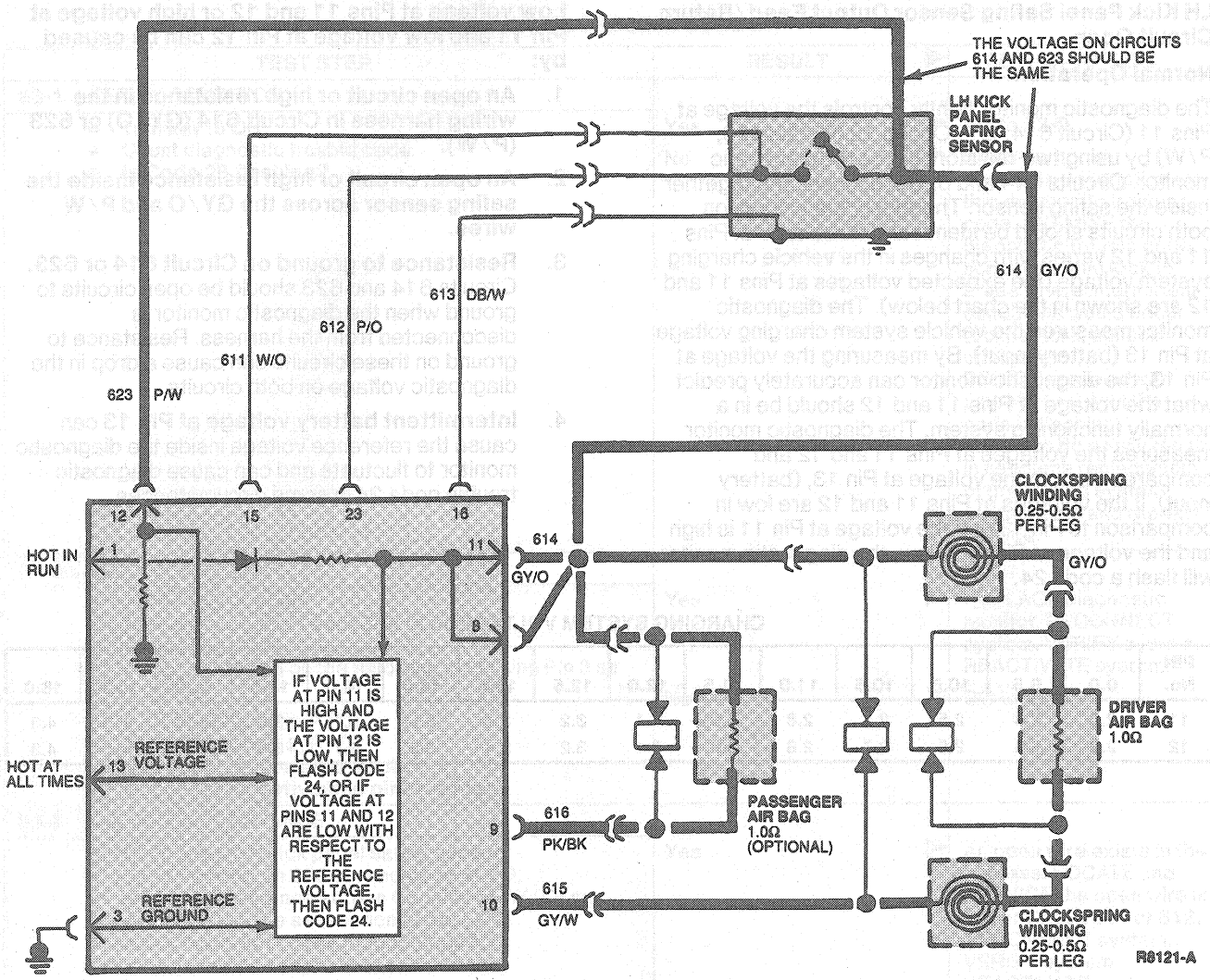
Electrical Schematic—Diagnostic Trouble Code 24